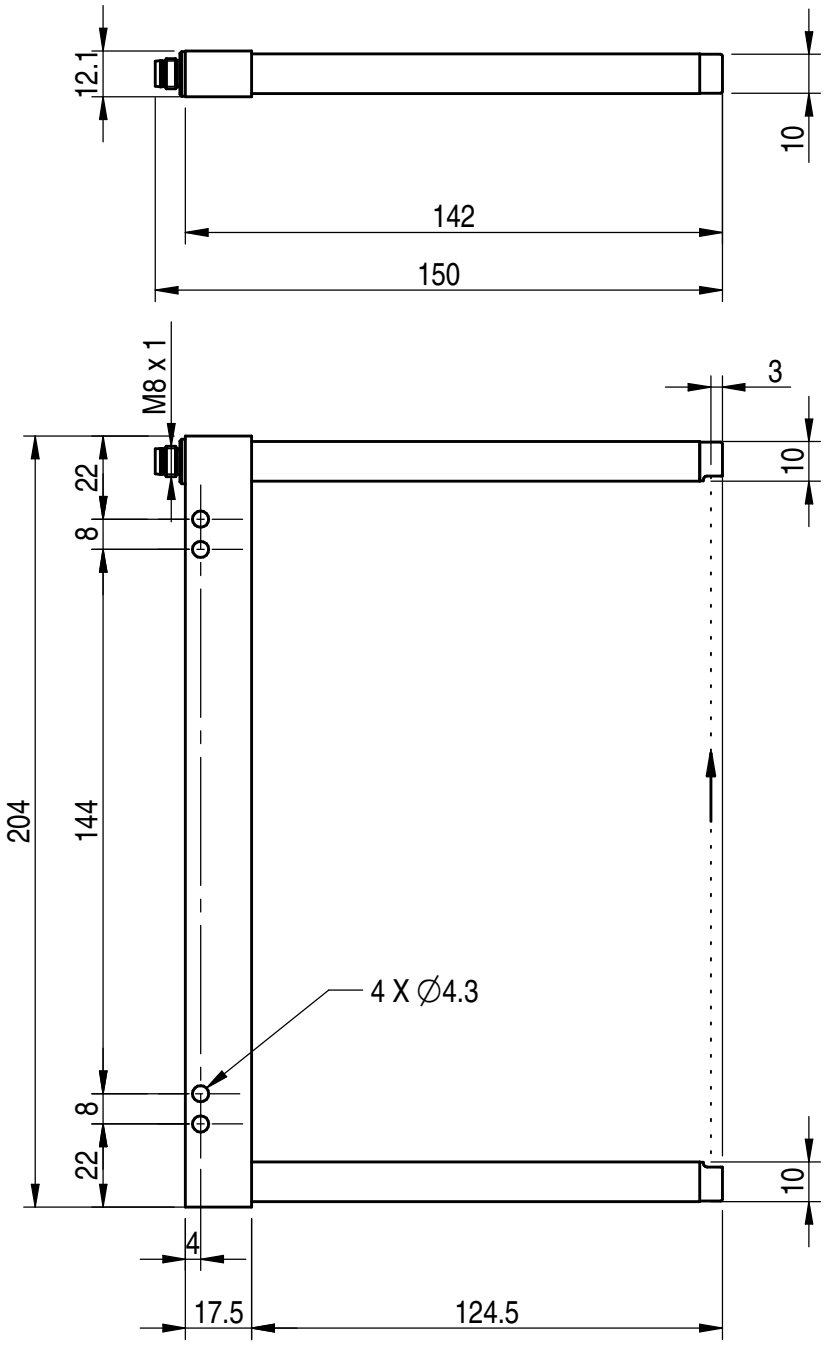
12.1
10
142
150
M8 x 1
3
10
22
8
204
144
4 X ∅4.3
8
22
10
4
17.5
124.5